utile

ENVIRONMENTAL ENGINEERING SOLUTIONS

D12-70

Oil Free Vacuum Priming Pumps

These positive displacement sliding vane machines are designed with a slotted rotor mounted eccentrically in the cylinder housing blades manufactured from a special grade of carbon. The cylinder bore is honed to give maximum blade life. The drive end bearing arrangement gives positive rotor location and prevents mechanical contact with the end covers. Shaft seals are fitted to prevent grease leakage from the bearings. The blade depth can be quickly checked without removal of any parts or pipework.
All machines in this range are aircooled with a fan fitted at the rear end to assist cooling. Vacuum pumps operating above 457mm Hg (18" Hg) are designed with ballast air injection to enable continuous operation up to 660mm Hg (26"Hg).

Vacuum Pump:

Wellpointing/Vacuum Pump Priming

- Oil Fee Air Delivery
- No Oil Consumption
- Ballast Air Injection for High Vacuum
- Compact/Heavy Duty Design
- Low Noise Level
- Vibration-Free Running
- Easy Maintenance
- Pulsation-Free Delivery

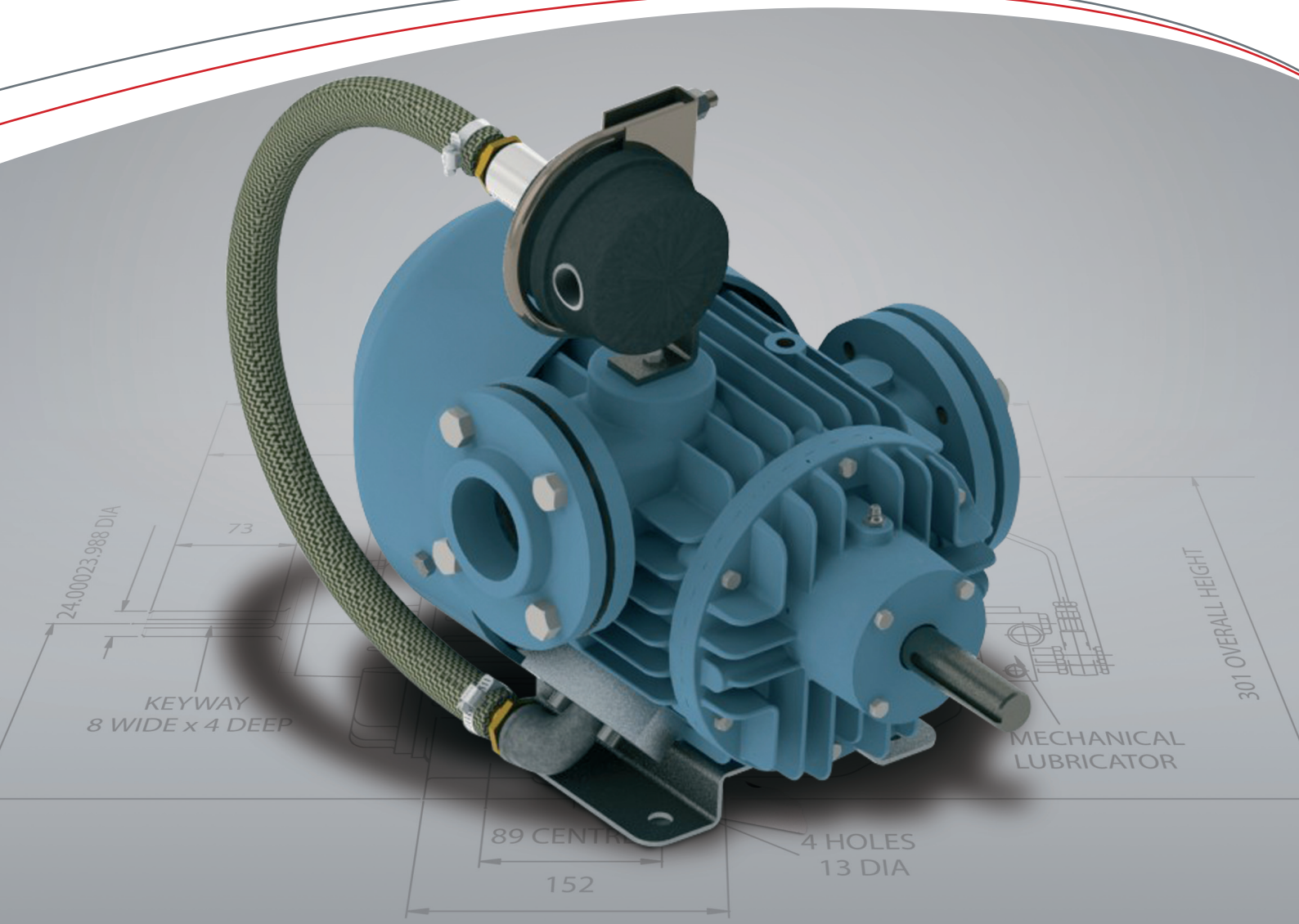

Dimensions & Performances

D12-32 VACUUM PUMPS – Capacity And Power

Model	Speed	Displacement	254 mmHg		381 mmHg		508 mmHg		559 mmHg		600 mmHg	
			Air Flow	Power	Air Flow	Power	Air Flow	Power	Air Flow	Power	Air Flow	Power
		m³/hr	m³/hr	kW	m³/hr	kW	m³/hr	kW	m³/hr	kW	m³/hr	kW
D12	1440	20.4	16.3	0.50	15.6	0.55	13.6	0.60	11.9	0.65	9.9	0.70
	1600	22.6	18.1	0.55	17.3	0.60	15.1	0.65	13.2	0.70	10.7	0.75
	1700	24.1	19.2	0.60	18.4	0.65	16.0	0.70	14.0	0.75	11.4	0.80
D18	1440	30.6	24.5	0.65	23.5	0.75	20.6	0.85	17.8	0.90	16.1	0.95
	1600	34.0	27.2	0.75	26.1	0.85	22.9	0.95	19.8	1.00	17.5	1.05
	1700	36.0	28.9	0.80	27.7	0.90	24.3	1.00	21.0	1.05	18.3	1.10
D26	1440	44.2	35.4	0.85	33.8	0.95	30.1	1.10	25.5	1.15	20.9	1.20
	1600	49.1	39.3	0.90	37.5	1.05	33.4	1.20	28.3	1.25	23.0	1.30
	1700	52.1	41.8	1.00	39.9	1.15	35.5	1.25	30.1	1.30	24.9	1.35
D32	1440	54.3	43.5	1.00	41.5	1.20	36.9	1.35	31.4	1.40	26.4	1.45
	1600	60.3	48.3	1.10	46.1	1.30	41.0	1.50	34.9	1.60	28.3	1.70
	1700	64.2	51.3	1.20	49.0	1.40	43.6	1.60	37.1	1.70	30.6	1.80

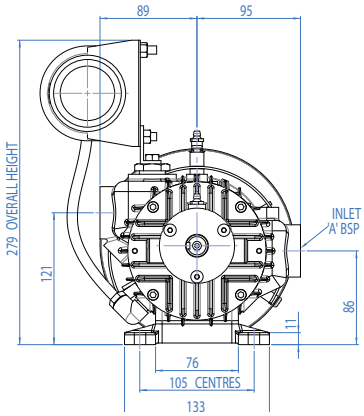

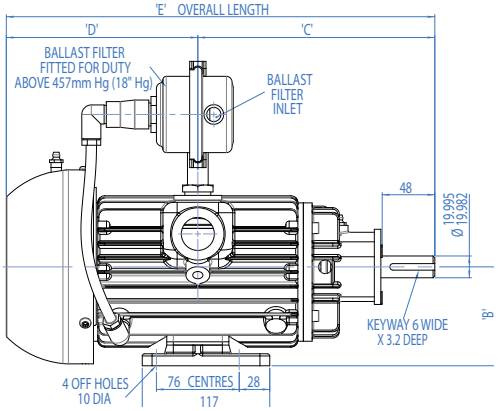

BARESHAFT VACUUM PUMPS					
Model	A	B	C	D	E
D12/R	1/2"	92	185	123	288
D18/R	3/4"	92	187	146	333
D26/R	1"	91	216	176	393
D32/R	1"	92	209	168	377

D38-70 VACUUM PUMPS – Capacity And Power

Model	Speed	Displacement	254 mmHg		381 mmHg		508 mmHg		559 mmHg		660 mmHg	
			Air Flow	Power	Air Flow	Power	Air Flow	Power	Air Flow	Power	Air Flow	Power
		m³/hr	m³/hr	kW	m³/hr	kW	m³/hr	kW	m³/hr	kW	m³/hr	kW
D38	960	64.5	49.4	0.88	46.5	1.09	42.3	1.28	40.8	1.35	25.3	1.53
	1100	73.9	56.6	1.01	53.3	1.25	48.5	1.47	46.7	1.55	29.7	1.66
	1300	87.4	66.8	1.19	62.9	1.47	57.3	1.73	55.3	1.84	36.4	1.98
D51	960	86.6	70.6	1.43	66.7	1.66	60.1	1.95	56.0	2.02	34.0	2.21
	1100	99.2	80.9	1.57	76.4	1.90	68.9	2.23	64.2	2.31	39.9	2.55
	1300	117.3	95.6	1.85	90.4	2.28	81.4	2.64	75.8	2.73	48.8	3.02
D70	960	118.9	99.8	1.90	94.6	2.20	86.8	2.48	81.5	2.56	56.1	2.76
	1100	136.2	114.3	2.18	108.4	2.52	99.5	2.84	93.4	2.93	66.8	3.15
	1300	161.0	135.1	2.57	128.1	2.98	117.5	3.35	110.4	3.47	77.3	3.73

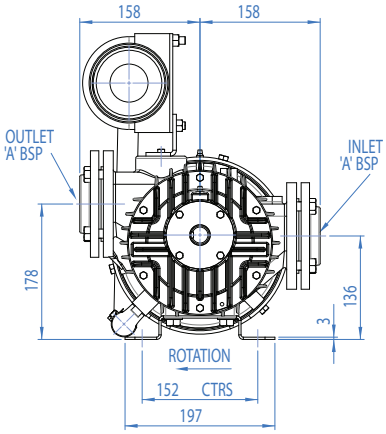

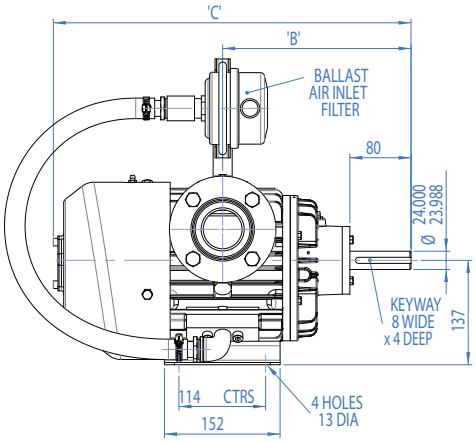

BARESHAFT VACUUM PUMPS				
Model	A	B	C	Weight(Kg)
D38/R	1.5"	226	426	42
D51/R	2"	248	470	49
D70/R	2"	280	534	59